SET-UP SHEET — XRAY 808

RACE	SUMMER RND 9
TRACK	PENDLE

NAME	ampsh808	
CITY / COUNTRY	NELSON	UK
CONTACT		

DATE	19/10/2009

TEMPERATURE / °F or °C	AIR	TRACK

LAPS	FINAL POSITION	BEST LAPTIME/sec	RACE LENGTH/min.
25	1	44.908	20

TRACK SIZE	☐ OPEN	☒ MEDIUM	☐ TIGHT
TRACK TRACTION	☐ HIGH	☒ MEDIUM	☐ LOW
TRACK SURFACE	☐ SMOOTH	☐ MEDIUM	☒ BUMPY
TRACK TYPE	☒ HARD PACKED	☐ SOFT DIRT	☐ CLAY
	☐ BLUE GROOVE	☐ ASTRO TURF	☐ GRASS
TRACK CONDITION	☐ DRY	☒ DUSTY	☐ WET ☐ MUD

DIFFERENTIALS

TYPE		
FRONT	CENTER	REAR
STD	STD	STD
DIFFERRENTIAL - OIL		
7K	6K	2K

GEARING

CLUTCH BELL	16 T	SPUR GEAR	42 T
PINION	10 T	CROWN GEAR	43 T
SPRING	RMV	SHOE	RMV CARBON

SHOCKS

FRONT		REAR
#358182 C = 0.65 ☒	WHITE ☐	#358282 C = 0.47
#358183 C = 0.70 ☐	GREY ☒	#358283 C = 0.50
#358184 C = 0.75 ☐	SILVER ☐	#358284 C = 0.53
#358185 C = 0.80 ☐	GREY-BLUE ☐	#358285 C = 0.57
#358186 C = 0.86 ☐	BLUE ☐	#358286 C = 0.61
#358187 C = 0.92 ☐	VIOLET ☐	#358287 C = 0.65
#358188 C = 0.98 ☐	PURPLE ☐	#358288 C = 0.70
50	OTHER	60
	OIL / cST	
10%	REBOUND /%	10%
1.3 mm ☐ 1.4 mm ☒ 1.5 mm ☐	PISTONS HOLES SIZE	☐ 1.3 mm ☐ 1.4 mm ☒ 1.5 mm
	OTHER	

ANTI ROLL BAR

FRONT	THICKNESS / mm	REAR
2.8		3.0

TIRES

FRONT		REAR
TOUREX	TYPE	X200 MED
	INSERTS	
	WHEELS	

ENGINE

TYPE	RB WS9
MANIFOLD	
MUFLER	JP4
PLUG	RB
FUEL	DC POWER + 25%

BODY

TYPE	808 V2

FRONT — ● ☒ ■ ☑ APPLIED — REAR

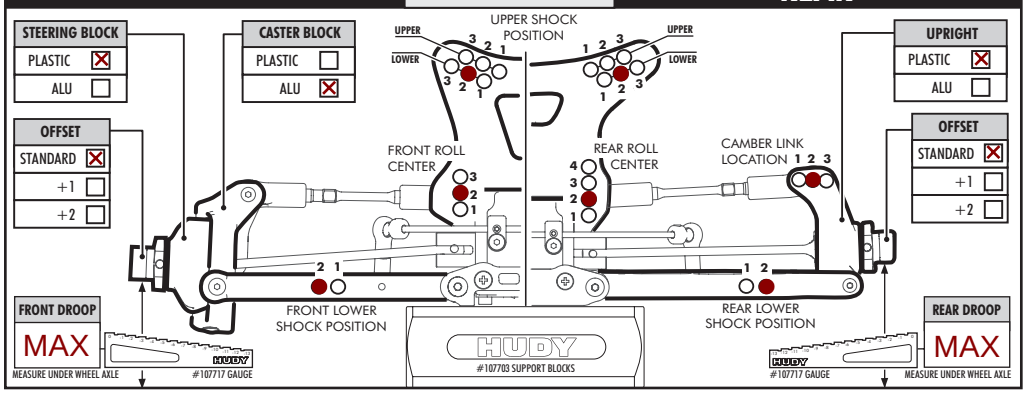

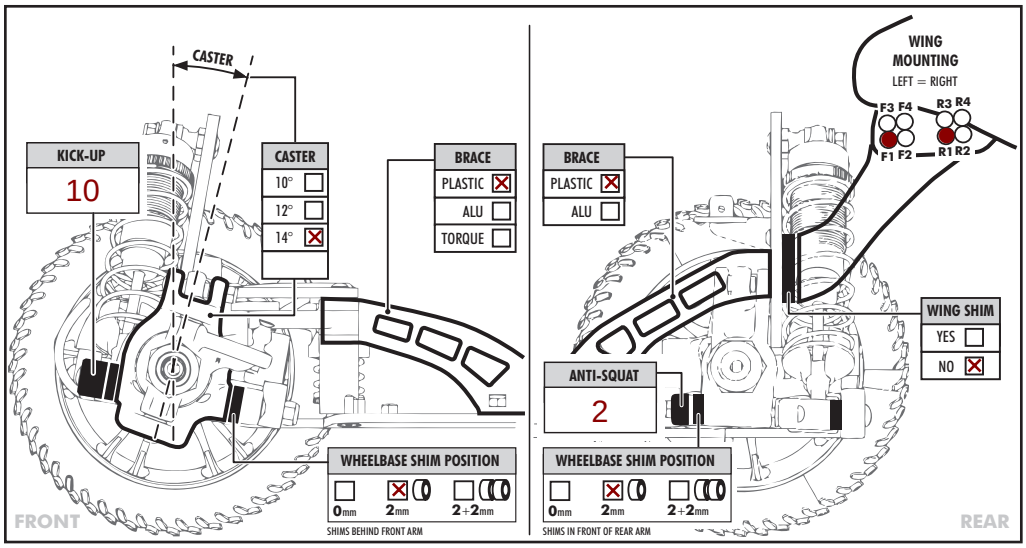

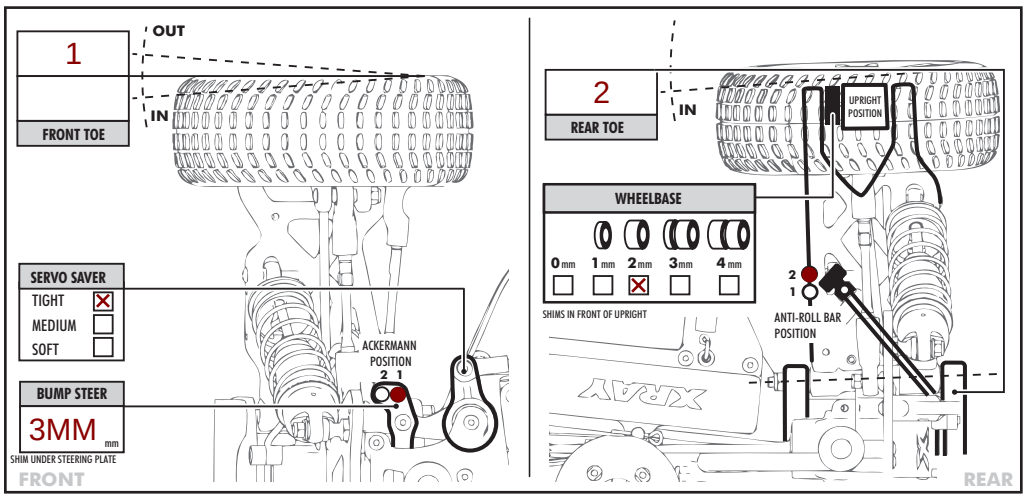

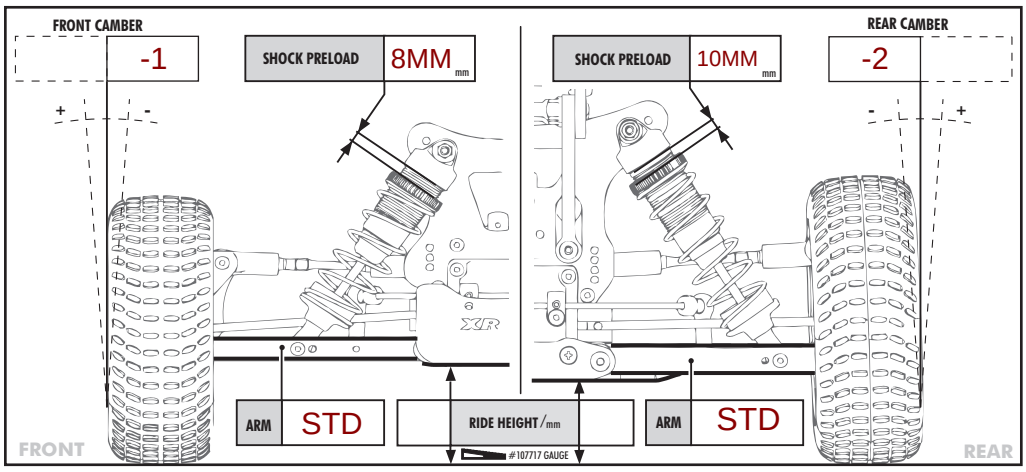

COMMENTS

USED XB8 REAR ROLL BAR 3.0MM
16% ALU CASTOR BLOCKS USED DOES NOT SHOW ON SHEET
WISHBONES SET LEVEL

VER. 5.0 ©XRAY